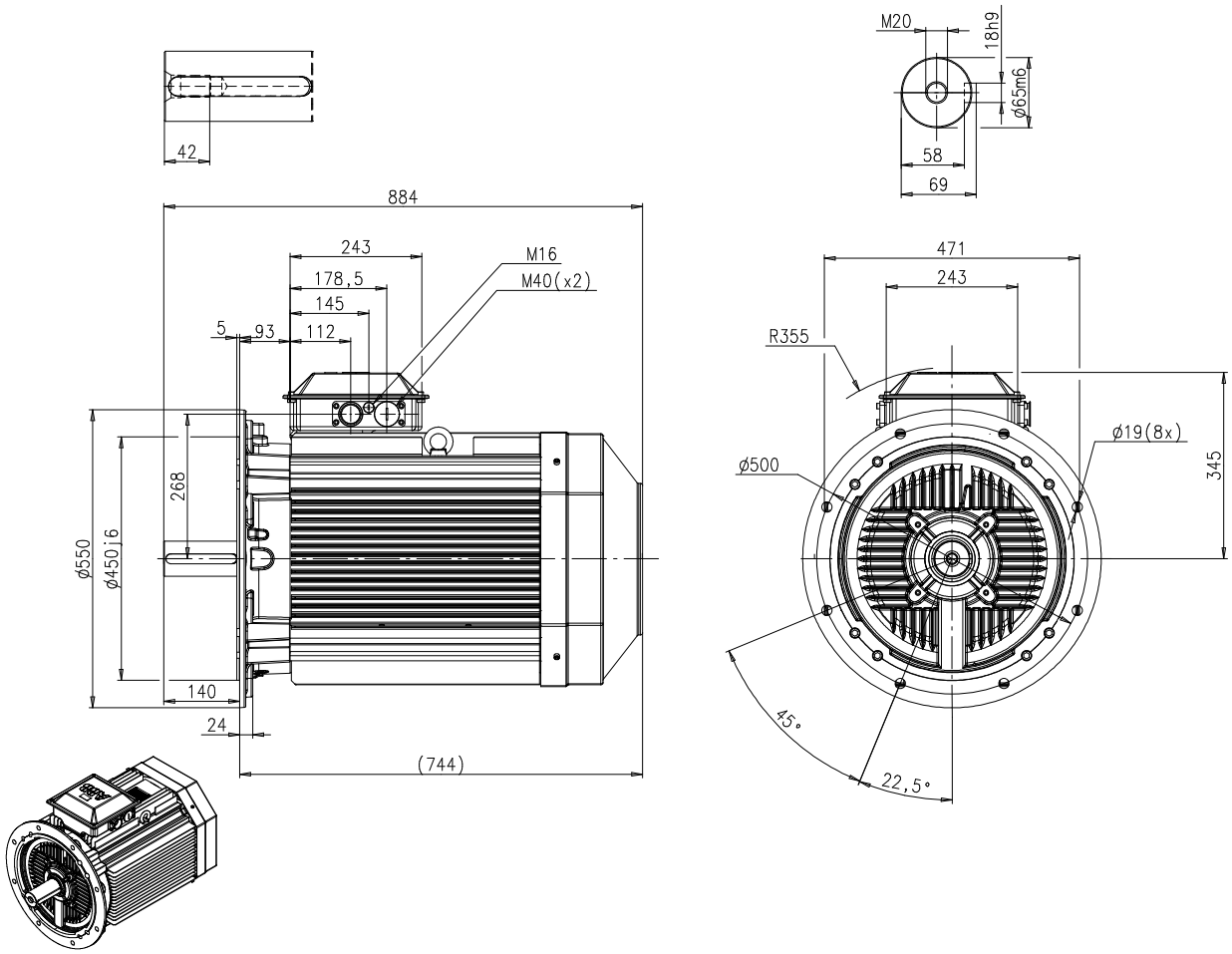

Motor Dimension Print	Motor Type: **M3AA 250-4-8p IM3001**	Document No: **3GZV 102 030-B A1.4808**
Description: **Three phase motor**		
Unit: ABB AB, LV Motors, Sweden.	Issued by: H Thorstenson	Replaces:
Date: **2008-01-22**	Approved by: N Jonsson	Replaced by:
	Customer Reference:	